FIG: 12	GONIOSTAT TOP VIEW
-1	ϕ CIRCLE DRIVE AND ENCODING SYSTEM
-2	κ ANGLE COARSE READING
-3	κ AXIS ENCODING SYSTEM
-4	ϕ ANGLE FINE READING
-5	GONIOMETER HEAD SUPPORT
-6	ϕ ANGLE COARSE READING
-7	TELESCOPE
-8	OCULAR
-9	TELESCOPE FOCUS ADJUSTMENT
-10	κ AXIS DRIVE SYSTEM
-11	κ ANGLE FINE READING
-12	POLAROID STAND MOUNTING POST
-13	PIN
-14	KNOB
-15	BEAMSTOP
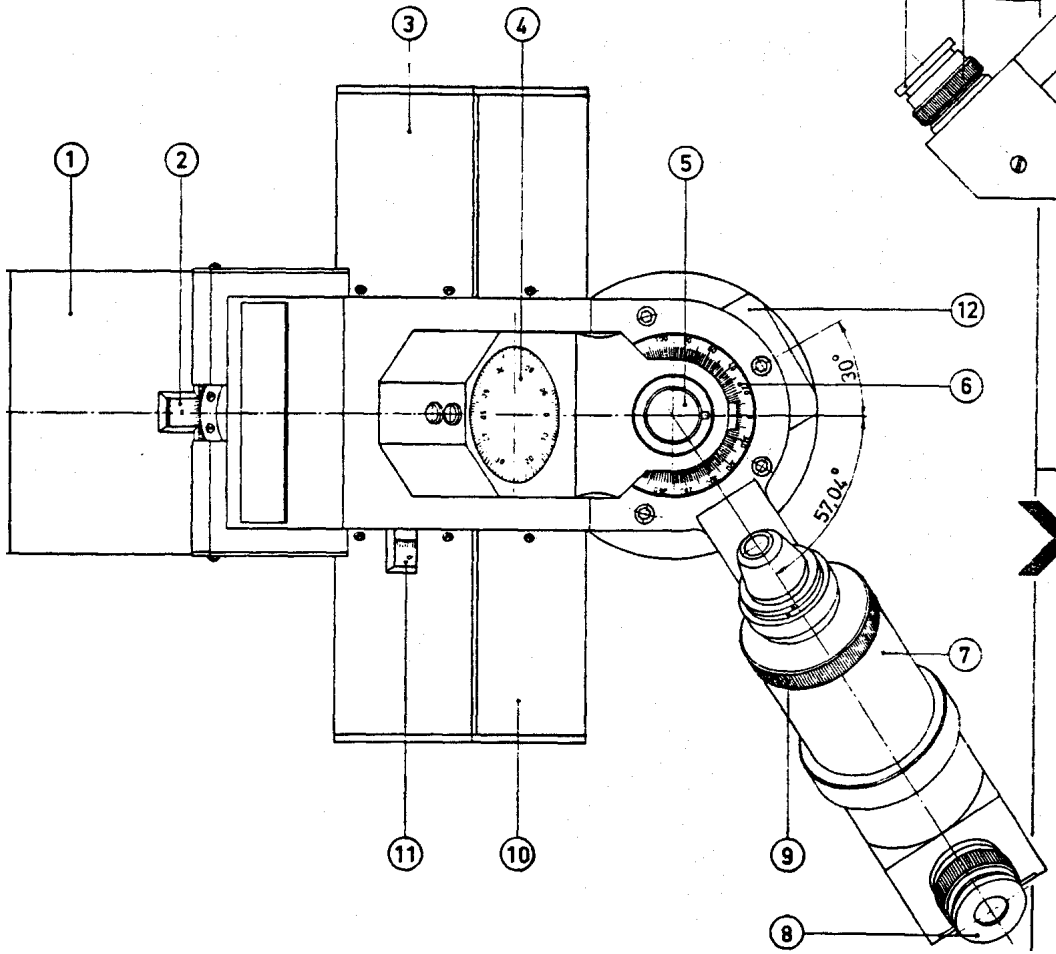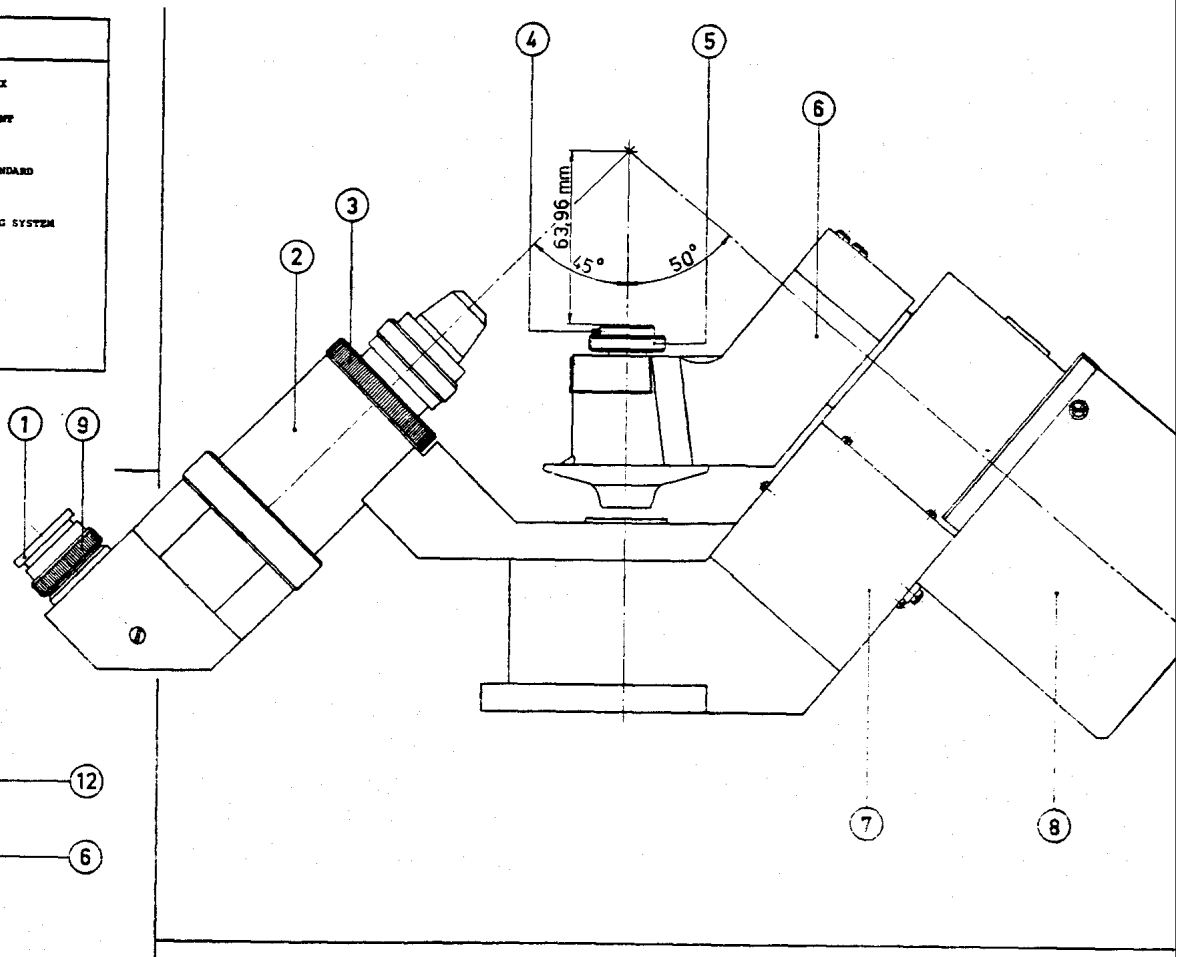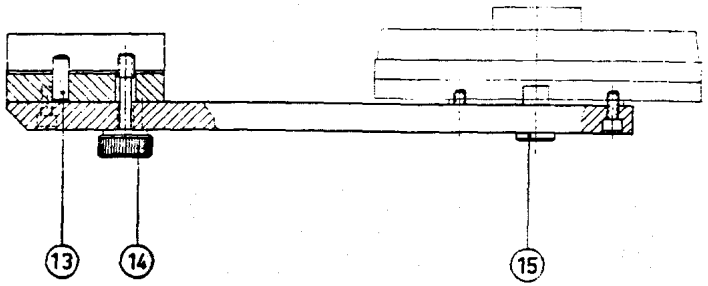
FIG. 13	GONIOSTAT SIDE VIEW
-1	OCULAR MAGNIFICATION 5 X
-2	TELESCOPE
-3	TELESCOPE FOCUS ADJUSTMENT
-4	POSITIONING KEY ϕ = 0°
-5	GONIOMETER HEAD SUPPORT ACCORDING TO A C A STANDARD
-6	κ ARM
-7	κ AXIS ENCODING SYSTEM
-8	ϕ AXIS DRIVE AND ENCODING SYSTEM
-9	OCULAR LOCK